Technical data sheet

Cable tray RKS-Magic® 60 FS

Item number: 6047611

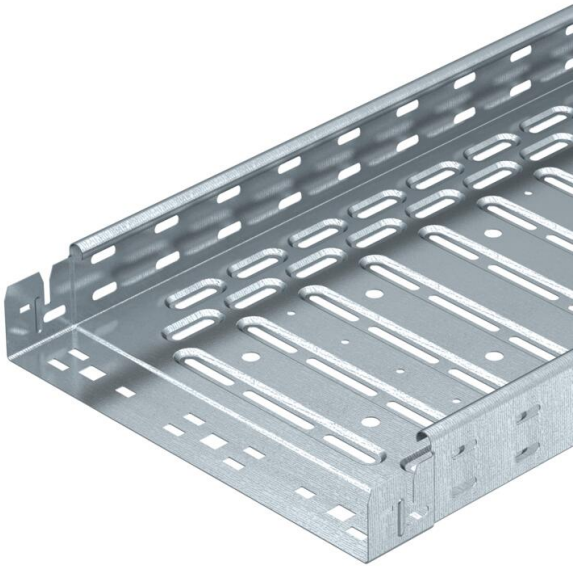

Cable tray with integrated quick fastening system. The usable length of the cable tray is 3,000 mm.

The cable tray has continuous side perforations of 7 x 20 mm for the installation of additional connection and mounting components.

The perforation for direct threaded rod suspension has a diameter of 11 mm. Continuous equipotential bonding is guaranteed without additional components. Magnetic shield insulation without cover 20 dB, with cover 50 dB.
The cable tray is tested for the maintenance of electrical function, tested according to DIN 4102 Part 12 and for mounting above suspended fire protection ceilings (each for tray widths 100 - 400 mm).

The mounting version and parameters correspond to the valid certificates.

You can find additional information in our fire protection systems catalogue.

E30 E60 E90

St Steel

FS Strip galvanised

Master data

Item number	6047611
Type	RKSM 610 FS
Description 1	Cable tray RKSM
Description 2	Magic, quick connector
Manufacturer	OBO
Dimension	60x100x3050
Colour	zinc
Material	Steel
Surface	Strip galvanised
Surface standard	DIN EN 10346
Smallest sales unit	3
Unit of quantity	Metre
Weight	132.131 kg
Weight unit	kg/100 m
CO2 Footprint (GWP) Cradle-to-Gate	3,1844 kg CO2e / 1 Meter

Technical data sheet

Cable tray RKS-Magic® 60 FS

Item number: 6047611

Dimensions

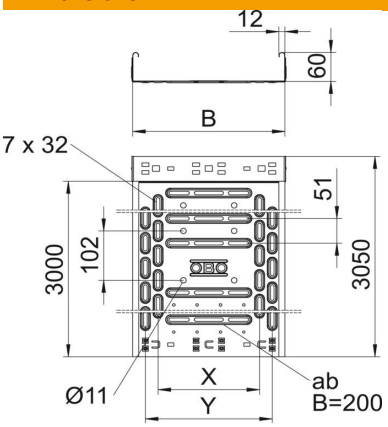

Length	3,050 mm
Length	10 ft
Width	100 mm
Width	4 in
Height	60 mm
Height	2 in
Plate thickness	0.03 in
Plate thickness	0.75 mm
Dimension B	100 mm
Dimension y	50 mm

Technical data

Connector version	Integrated connector
Mounting system fastening type	Floor Ceiling Wall
Walkable	no
Base perforation	1
Maintain electrical functions	yes
With cover	no
Mounting perforation in base	yes
NATO hole pattern	no
Usable cross-section	58 cm²
Usable cross-section	5800 mm²
ROHS-conformant	yes
Rustproof steel, pickled	no
Side perforation	yes
Wide-span version	no
Magnetic shield insulation without cover	20 dB
Magnetic shield insulation with cover	50 dB
Load test type according to IEC 61537	Type II
Usable length	3000 mm
Type of connector, cable support system	Click fastening

Loads

Insertable support spacings, min.	1 m
Insertable support spacings, max.	2.5 m
NEMA load class	8AA
Support spacing 1.0 m	1.2 kN/m
Support spacing 1.5 m	0.9 kN/m
Support spacing 2.0 m	0.6 kN/m
Support spacing 2.5 m	0.4 kN/m

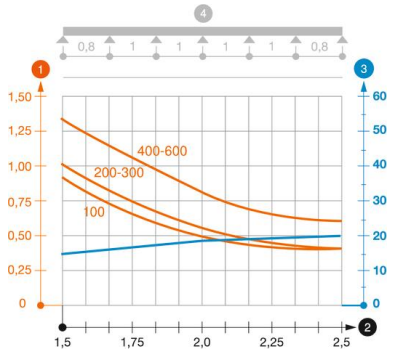

Load diagram, cable tray, type RKSM 60

1. Permitted cable tray/ladder load in kN/m without man load
2. Support width in m
3. Rail bend in mm at permitted kN/m
4. Load scheme during testing

— Load curve with cable tray/ladder width in mm

— Strut bend curve according to support width