Technical data sheet

LightningController - MCF25-NAR-TNC

Item number: 5096950

Combination arrester, type 1+2, for mounting on 40 mm busbars, for TN-C systems

• Protection level ≤1.5 kV to protect the terminals
• Lightning protection equipotential bonding according to VDE 0185-305 (IEC 62305)
• Lightning current arresting capacity up to 25 kA (10/350) 3-pole
• Fulfils the requirements of VDE 0100-534 (IEC 60364-5-53)
• Line follow current quenching up to 50 kA and max. backup fuse up to 160 A gL/gG
• Spark gaps for use in the pre-meter area according to VDE-AR-N 4100

Application: Building with outside cable infeed.

RoHS conform | 230/400 V System | Type 1+2 | LPZ 0→2 | HALOGEN FREE

Master data

Item number	5096950
Type	MCF25-NAR-TNC
Description 1	LightningController Rail
Description 2	3-pole
Manufacturer	OBO
Dimension	255V
Smallest sales unit	1
Unit of quantity	Piece
Weight	100.8 kg
Weight unit	kg/100 pc.
CO2 Footprint (GWP) Cradle-to-Gate	5,3572 kg CO2e / 1 Piece

Technical data sheet

LightningController - MCF25-NAR-TNC

Item number: 5096950

Dimensions

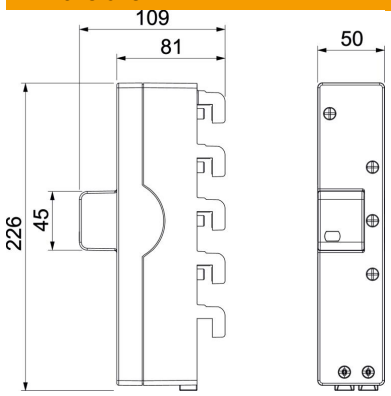

Length	226 mm
Width	50 mm
Height	109 mm

Technical data

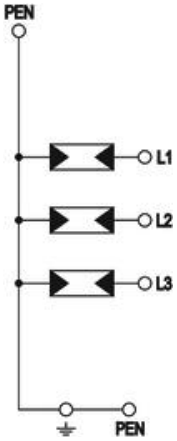

Arrester surge current (8/20 µs) [total]	60 kA
Connection cross-section (min.)	10 mm²
Response time	<100 ns
Response time [L-N]	<100 ns
Response time [N-PE]	<100 ns
Version for	3+NPE
Pole version	3
Structural width in division units (division unit, 17.5 mm)	Miscellaneous
Operating temperature, max.	80 °C
Operating temperature, min.	-40 °C
Lightning surge current (10/350 µs)	8.5 kA
Lightning surge current (10/350)	25 kA
Torque	35 Lbs
Torque	3.5 Nm
Installation location	Interior
Remote signalling	no
Function/defect display	Visual
Housing material surge protection components	PA UL 94 V-0
Combined voltage protection level [L-PEN]	1.5 kV
Maximum continuous voltage (L-N)	255 V
Maximum continuous voltage AC	255 V
Short-circuit resistance for max. mains-side overcurrent protection	50 kA eff
Conductor cross-section, flexible (fine-wire), max.	35 mm²
Conductor cross-section, flexible (fine-wire), max.	2 AWG
Conductor cross-section, flexible (fine-wire), min.	7 AWG
Conductor cross-section, flexible (fine-wire), min.	10 mm²

Technical data sheet

LightningController - MCF25-NAR-TNC

Item number: 5096950

Technical data

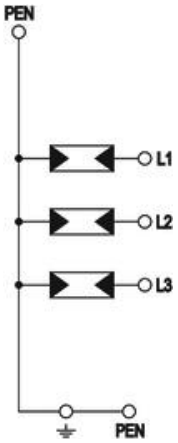

Conductor cross-section, rigid (single-wire/multiwire), max.	2 AWG
Conductor cross-section, rigid (single-wire/multiwire), max.	35 mm²
Conductor cross-section, rigid (single-wire/multiwire), min.	7 AWG
Conductor cross-section, rigid (single-wire/multiwire), min.	10 mm²
Humidity, min.	5 %
Humidity, max.	95 %
Max. mains-side overcurrent protection	160 A
Maximum back-up fuse	160 A
Maximum discharge current (8/20 µs)	50 kA
Maximum discharge current (8/20 µs) [L-N]	50 kA
Minimum distance	0 mm
Installation type	Bus bar 40 mm
Nominal discharge current (8/20 µs)	20 kA
Nominal discharge current (8/20 µs) [L-N]	20 kA
Nominal frequency	50 Hz
Nominal voltage AC (50/60 Hz)	230 V
Network form	TN-C
TN network form	yes
TN-C network form	yes
Ports	One-Port SPD
ROHS-conformant	Exempt
Protection rating	IP20
Protection level	≤1,5 kV
Signalling on device	Visual
SPD to EN 61643-11	Type 1+2
SPD to IEC 61643-11	Class I+II
Permitted temperature range, max.	80 °C
Permitted temperature range, min.	-40 °C
TOV voltage [L-N] – fail safe mode – 120 min.	442 V
TOV voltage [L-N] – withstand mode – 5 s	440 V
Approvals	VDE