Technical data sheet

FineController FC-ISDN for ISDN telephone systems and terminals
Item number: 5092812

Type 3 combined surge protection to EN 61643-11
designed for use in ISDN / DSS 1 telephone systems and terminals.

- Adapter connector
- Cut-off unit and function display
- With increased contact protection
- Incl. 0.5 m connection cable RJ12
- Maximum continuous voltage, ISDN connection 6 V DC / 1.5 A (25 °C)
- Limit frequency: type 300 kHz

Note: The technical data in the table below refers to the power supply.

Type 3 | LPZ 2→3 | ISDN | DSL

Master data

Item number	5092812
Type	FC-ISDN-D
Description 1	FineController
Description 2	for ISDN
Manufacturer	OBO
Dimension	230V
Colour	Pure white; RAL 9010
Smallest sales unit	1
Unit of quantity	Piece
Weight	18 kg
Weight unit	kg/100 pc.

Technical data sheet

FineController FC-ISDN for ISDN telephone systems and terminals

Item number: 5092812

Dimensions

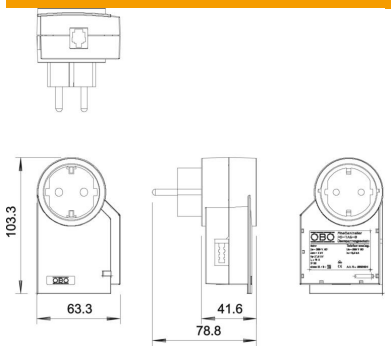

Technical data

Response time	<25 ns
Version for	Schuko – ISDN
Max. continuous operating voltage	275 V
Lightning protection zone LPZ	2→3
Country-specific version	D
Maximum back-up fuse	16 A
With interference suppression filter	no
Nominal discharge surge current	3 kA
Rated current	16 A
Nominal voltage	230 V
Test class, type 3	yes
Protection rating	IP20
Protection level	< 1,5 kV
Protection level (L-N / L/N-PE)	<1200 / <1500 V
Protection level (L-N)	< 1,2 kV
Protection level (N-PE)	< 1,5 kV
Signalling on device	None
SPD to EN 61643-11	Type 3
SPD to IEC 61643-1	Class III
Permitted temperature range, max.	75 °C
Permitted temperature range, min.	-25 °C