Technical data sheet

Surge protection module ÜSM 10

Item number: 5092440

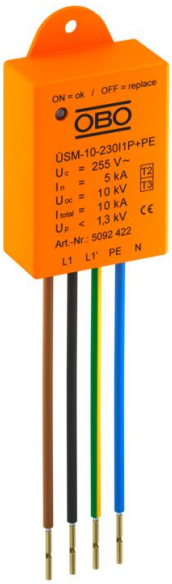

Surge protection module type 2+3 to DIN EN 61643-11 for 230/400 V power grids.

Appropriate for the protection of LED lighting.

- With function display and switch-off of the load circuit when a SPD fails
- Small size for the installation in the pole connection box or upstream of the LED driver
- 1+NPE protective circuit with a maximum discharge capacity of 10 kA
- Reduction of overvoltage to under 1,00 V or 1,000 V @ 5 kA
- With or without luminaire switch-off in case of defect

Application: In the cable transition box, junction boxes, cable ducts and trunking through to underfloor systems
To protect electronic devices such as LED luminaires against surge voltages

LPZ 1→3 Type 2+3

Master data

Item number	5092440
Type	ÜSM-10-230I1PE25
Description 1	Surge protective Modul
Description 2	for LED lights with PE - SE
Manufacturer	OBO
Dimension	230V
Smallest sales unit	1
Unit of quantity	Piece
Weight	5.5 kg
Weight unit	kg/100 pc.
CO2 Footprint (GWP) Cradle-to-Gate	0,0436 kg CO2e / 1 Piece

Technical data sheet

Surge protection module ÜSM 10

Item number: 5092440

Dimensions

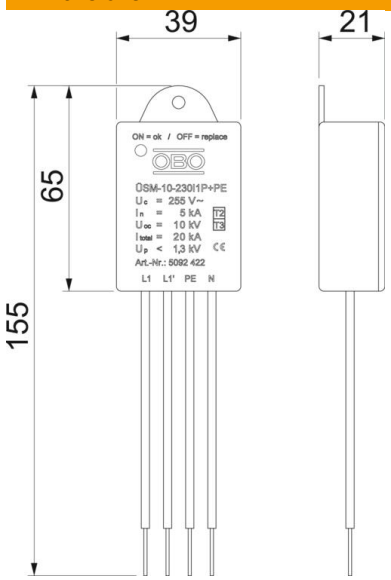

Length	315 mm
Width	40 mm
Height	21 mm

Technical data

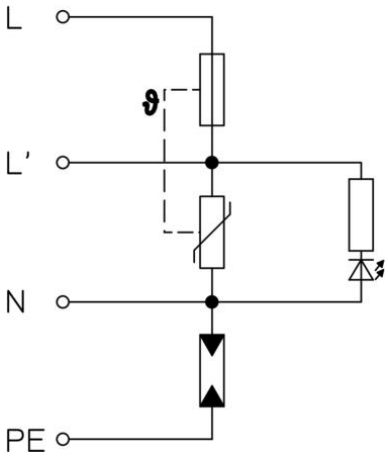

Arrester surge current (8/20 µs) [total]	10 kA
Connecting cable length	0.09 m
Response time	<25 ns
Version for	1-pole + NPE for PC I
Pole version	1+N/PE
Operating temperature, max.	80 °C
Operating temperature, min.	-40 °C
Combined voltage protection level [L-PE]	1500 kV
Maximum continuous voltage (L-N)	255 V
Maximum continuous voltage (N-PE)	255 V
Maximum continuous voltage AC	255 V
Lightning protection zone LPZ	1→2
Max. mains-side overcurrent protection	16
Maximum back-up fuse	16 A
Maximum discharge current (8/20 µs)	10 kA
Maximum discharge current (8/20 µs) [L-N]	10 kA
Maximum discharge current (8/20 µs) [N-PE]	10 kA
Installation type	Miscellaneous
Nominal discharge current (8/20 µs)	5 kA
Nominal discharge current (8/20 µs) [L-N]	5 kA

Technical data sheet

Surge protection module ÜSM 10

Item number: 5092440

Technical data

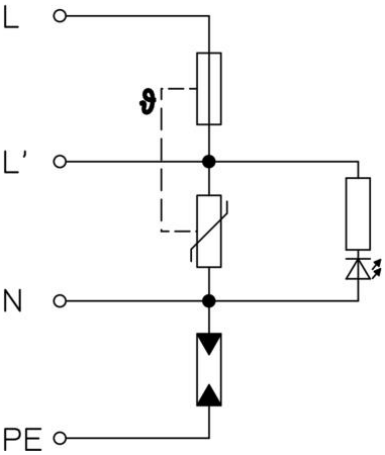

Nominal discharge current (8/20 µs) [N-PE]	5 kA
Nominal voltage AC (50/60 Hz)	230 V
OBO_Nominal load current (input/output terminal)	16 A
Test class, type 2	yes
Test class, type 3	yes
ROHS-conformant	yes
Protection rating	IP20
Protection level	1,5 kV
Protection level [L-N]	≤1500
Signalling on device	Visual
SPD to EN 61643-11	Type 2+3
SPD to IEC 61643-11	Class II+III
Permitted temperature range, max.	80 °C
Permitted temperature range, min.	-40 °C